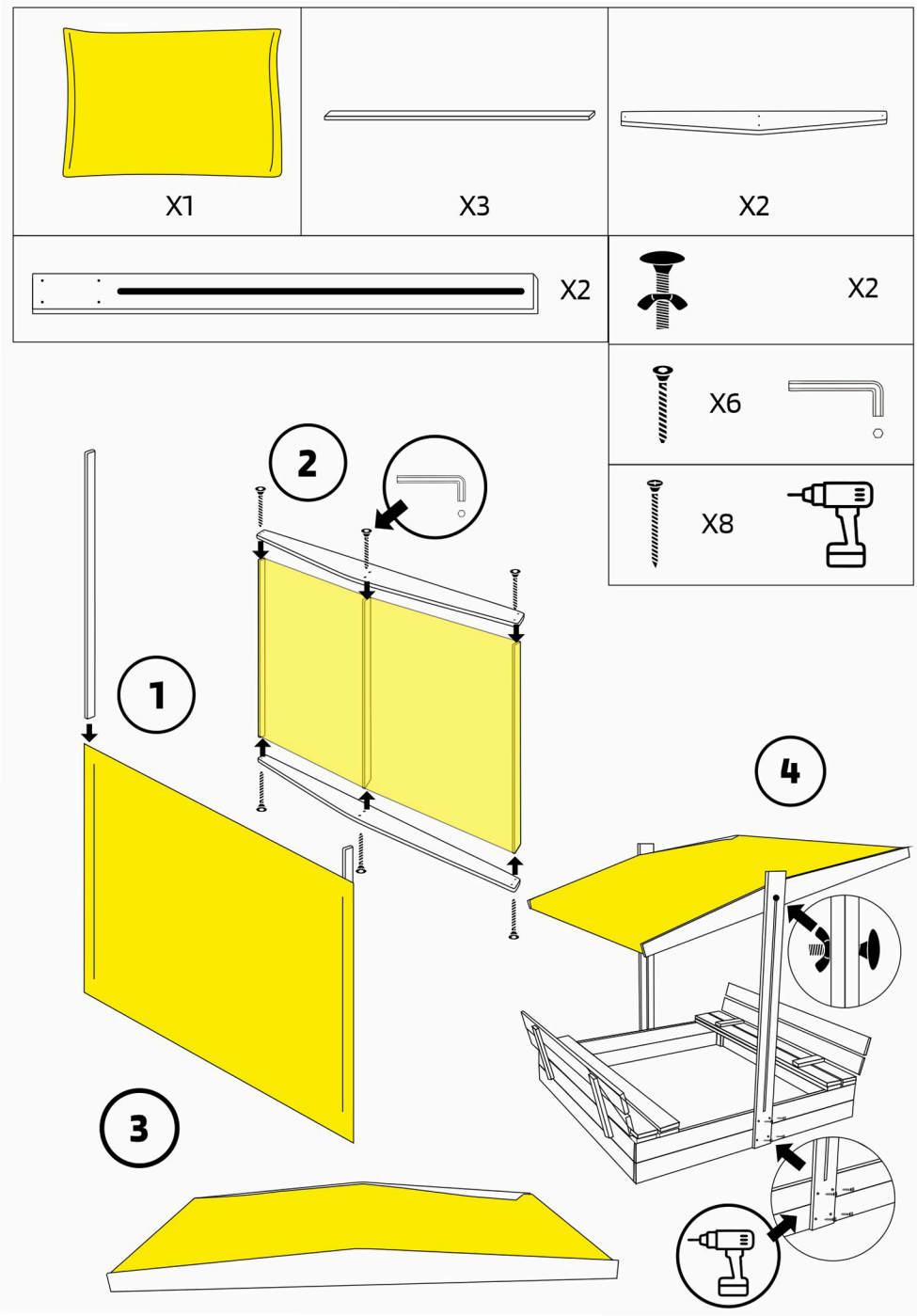
X1
X3
X2
X2
X2
X6
X8
1
2
3
4